radwag.com

WLC 6/F1/K Precision Balance

More information on the website
radwag.com/en/info,w1,U5F

WLC 6/F1/K Precision Balance

The drawings, photos and graphics used are for illustrative purposes only.

Functions

- Plus/Minus Control
- Percent Weighing
- Totalizing
- Parts counting
- Internal battery
- Peak hold
- Newton unit measurement

Datasheet

	WLC 6/F1/K Precision Balance
Metrological parameters	
Maximum capacity [Max]	6 kg
Minimum load	5 g
Readability [d]	0,1 g
Verification unit [e]	1 g
Tare range	-6 kg
Repeatability	0,1 g
Linearity	±0,2 g
Stabilization time	3 s
OIML Class	II
Physical parameters	
Leveling system	manual
Display	LCD (backlit)
Weighing pan dimensions	300×300 mm
Packaging dimensions	570×390×170 mm
Net weight	5,2 kg
Gross weight	5,5 kg
Construction	
Protection class	IP 43
Communication interface	
Communication interface	RS232
Electrical parameters	
Power supply	Adapter: 100 – 240V AC 50/60Hz 0,6A; 12V DC 1,2A Balance: 10 – 15VDC 0,6A max
Operation time on batteries	10 h (average time)
Environmental conditions	
Operating temperature	+15 ÷ +30 °C

Repeatability is expressed as a standard deviation from 10 weighing cycles. Stabilization time depends on the ambient conditions and the dynamics of weighing pan loading; specified for FAST profile.

Extra payment for verification

Accessories

Antivibration Tables
Power Adapters
RS 232 cables (scale - printer)
Stands, wall mounting kits and mounting brackets
Cigarette lighter receptacle power supply cables
Displays
RS 232, RS 485 cables
RS 232 – Ethernet Converter
AP2-1 Current Loop Unit
RS 232, RS 485 cables
RS 232 – USB Converter
RS 232 cables (scale - printer)
RS 232 – RS 485 Converter
Receipt Printer

Software

RAD-KEY
R-LAB
R Panel
Scales Editor 2.1

Device dimensions

WLC 6/F1/K Precision Balance

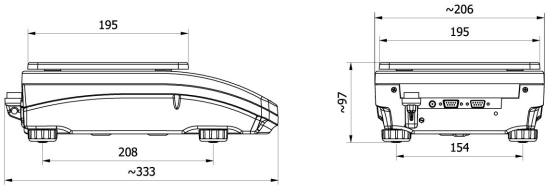

WLC A2

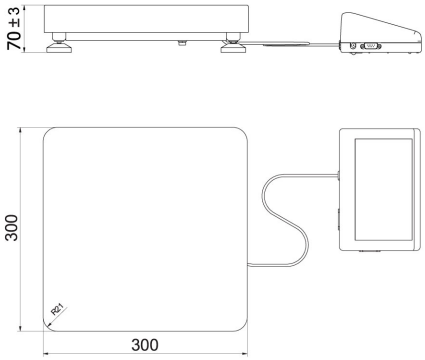

WLC F1/K

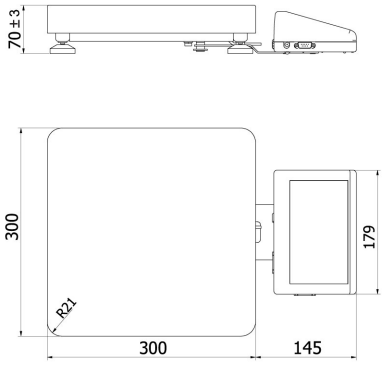

WLC F1/R

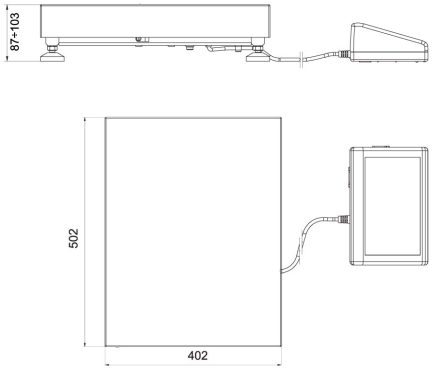

WLC C2/K

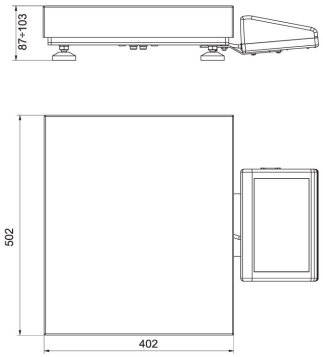

WLC C2/R